PLAN, SECTION AND DETAIL OF FENCING & GATE

TMBP–SP001–CS–DET–D102

NOTES :

DRAWING REFERENCE	DESCRIPTION	REV	DATE	DESCRIPTION	PREPR'D	CHECK'D	APRV'D	CHECKED	APPROVED
		A	18–12–2025	ISSUED FOR REVIEW	NSR	AS	RTN		

PT. PERTAMINA EP APPROVAL

PROCET :

JASA PEMBANGUNAN FASILITAS PRODUKSI STASIUN PENGUMPUL (SP)
TANJUNG MIRING BARAT & KARANGAN TIMUR

OWNER :

skkmigas PERTAMINA EP

CONTRACTOR :

POG

SCALE :	DRAWING NO.	SHEET. NO.	REV
NTS	TMBP – SP001 – CS – DET – D102	01 OF 05	A

DRAWING TITLE :

PLAN, SECTION AND DETAIL OF FENCING & GATE

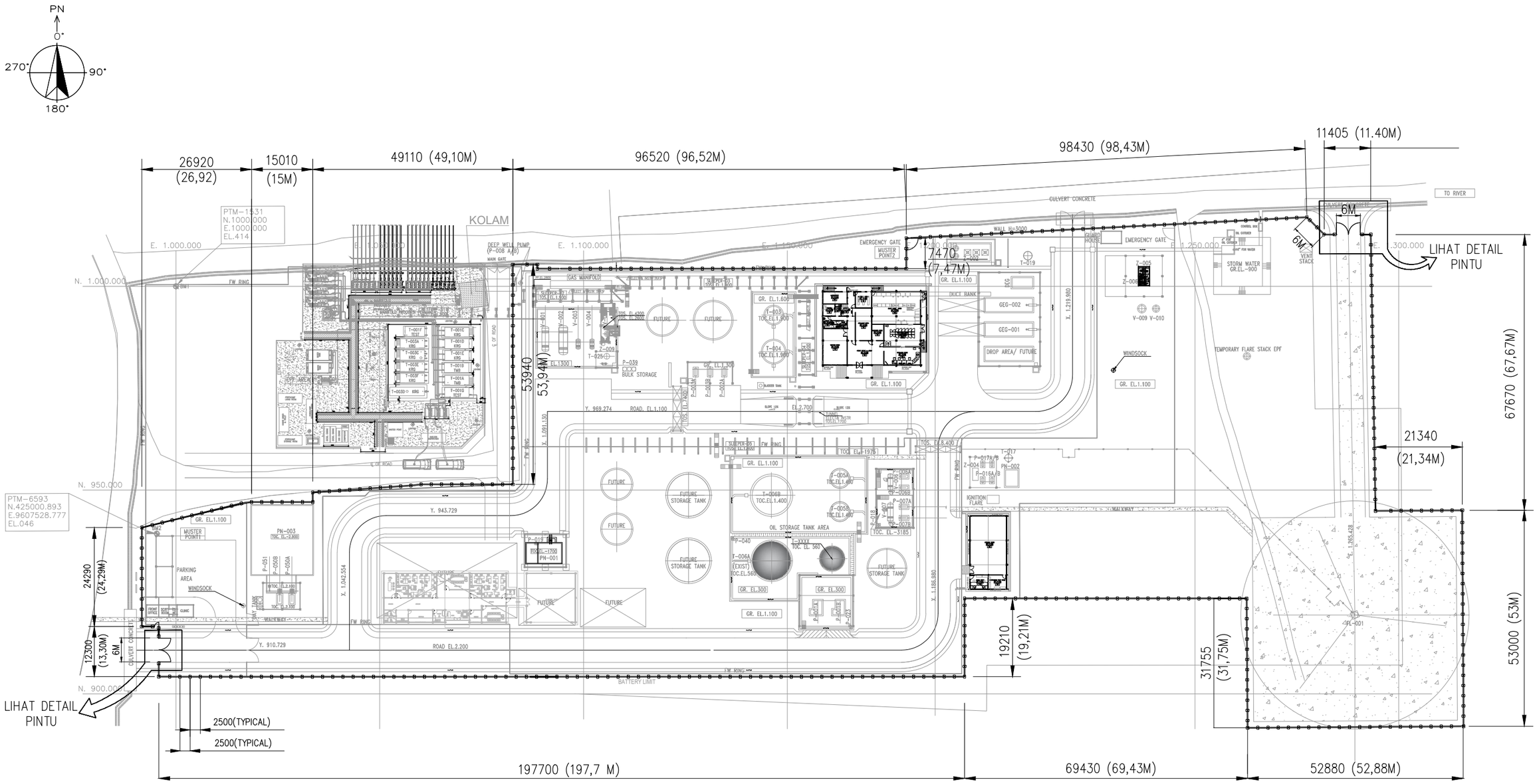

LAYOUT PAGAR DAN PINTU

SKALA: 1:1000

NOTES :

DRAWING REFERENCE	DESCRIPTION	REV	DATE	DESCRIPTION	PREPR'D	CHECK'D	APRV'D	CHECKED	APPROVED
		A	18-12-2025	ISSUED FOR REVIEW	NSR	AS	RTN		

PT. PERTAMINA EP APPROVAL

PROCET :

JASA PEMBANGUNAN FASILITAS PRODUKSI STASIUN PENGUMPUL (SP) TANJUNG MIRING BARAT & KARANGAN TIMUR

OWNER : skkmigas PERTAMINA EP

CONTRACTOR : POG

SCALE :	DRAWING NO.	SHEET. NO.	REV
NTS	TMBP – SP001 – CS – DET – D102	02 OF 05	A

DRAWING TITLE :

PLAN, SECTION AND DETAIL OF FENCING & GATE

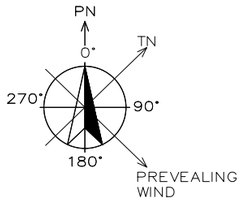

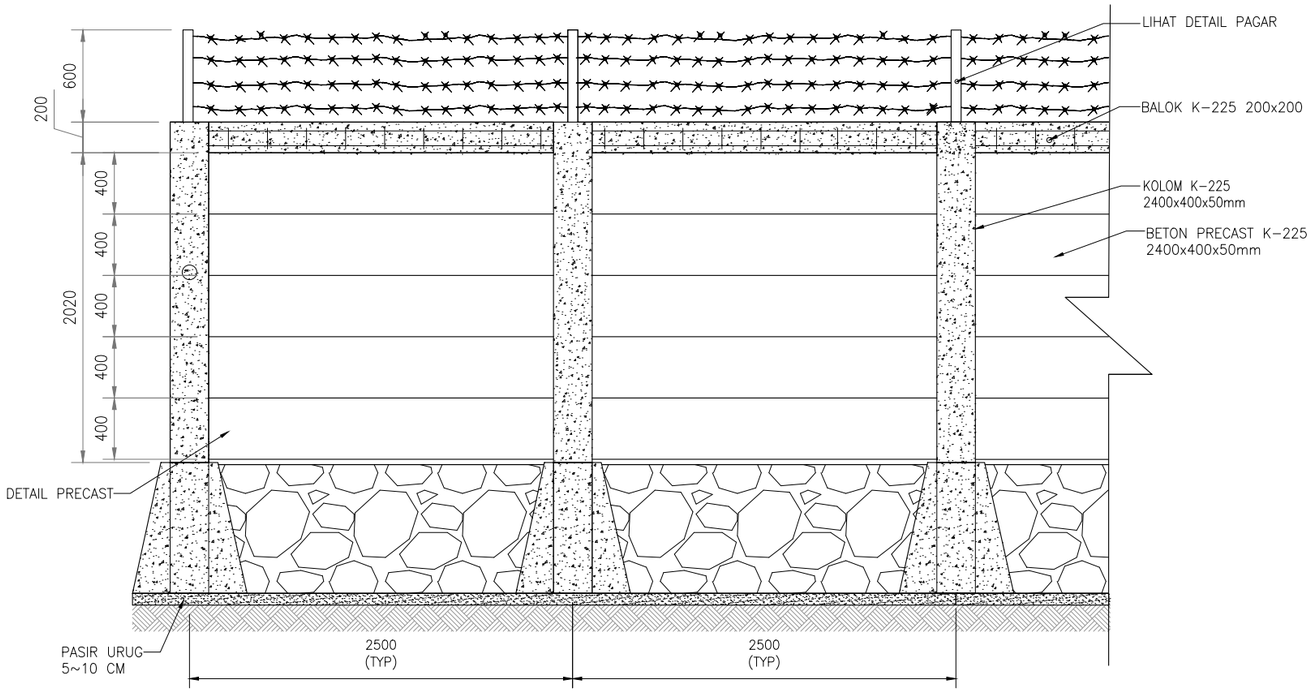

KOLOM DAN BALOK BETON PRECAST
SKALA: 1:40

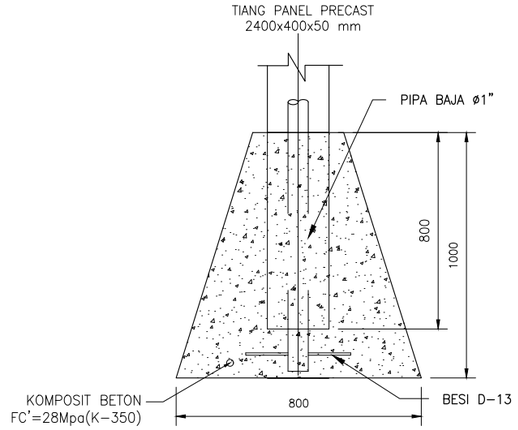

DETAIL FONDASI BATU KALI
SKALA: 1:25

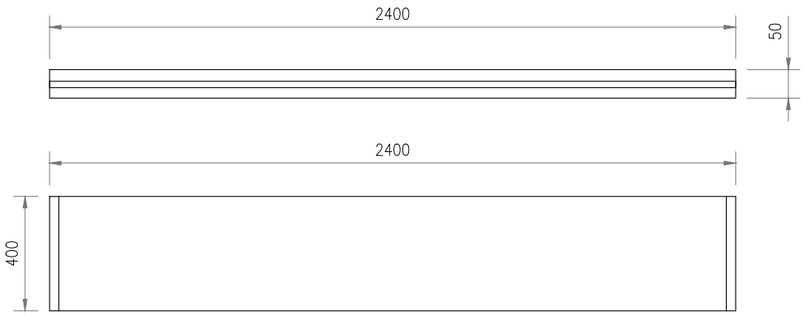

DETAIL BETON PRECAST
SKALA: 1:40

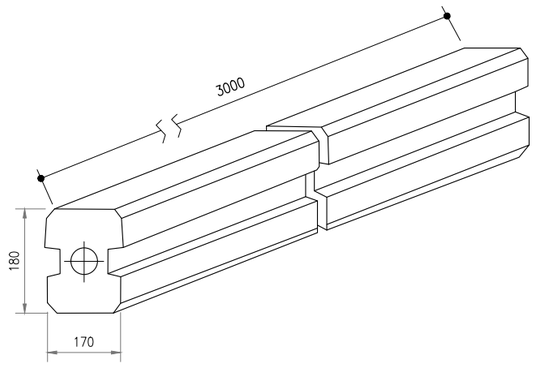

ISOMETRIC TIANG PANEL
SKALA: 1:40

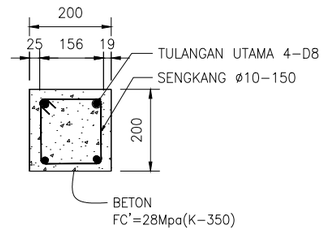

DETAIL KOLOM
SKALA: 1:15

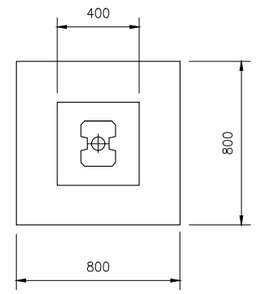

DETAIL SLOOP VETIN KOLOM
SKALA: 1:30

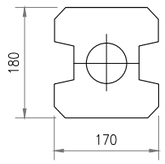

KOLOM TENGAH
SKALA: 1:10

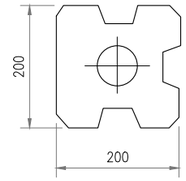

KOLOM SUDUT
SKALA: 1:10

NOTES :

DRAWING REFERENCE	DESCRIPTION	REV	DATE	DESCRIPTION	PREPR'D	CHECK'D	APRV'D	CHECKED	APPROVED
		A	18-12-2025	ISSUED FOR REVIEW	NSR	AS	RTN		

PT. PERTAMINA EP APPROVAL

PROCET : JASA PEMBANGUNAN FASILITAS PRODUKSI STASIUN PENGUMPUL (SP) TANJUNG MIRING BARAT & KARANGAN TIMUR

OWNER : skkmigas PERTAMINA EP

CONTRACTOR : POG

SCALE :	DRAWING NO.	SHEET. NO.	REV
NTS	TMBP – SP001 – CS – DET – D102	03 OF 05	A

DRAWING TITLE : PLAN, SECTION AND DETAIL OF FENCING & GATE

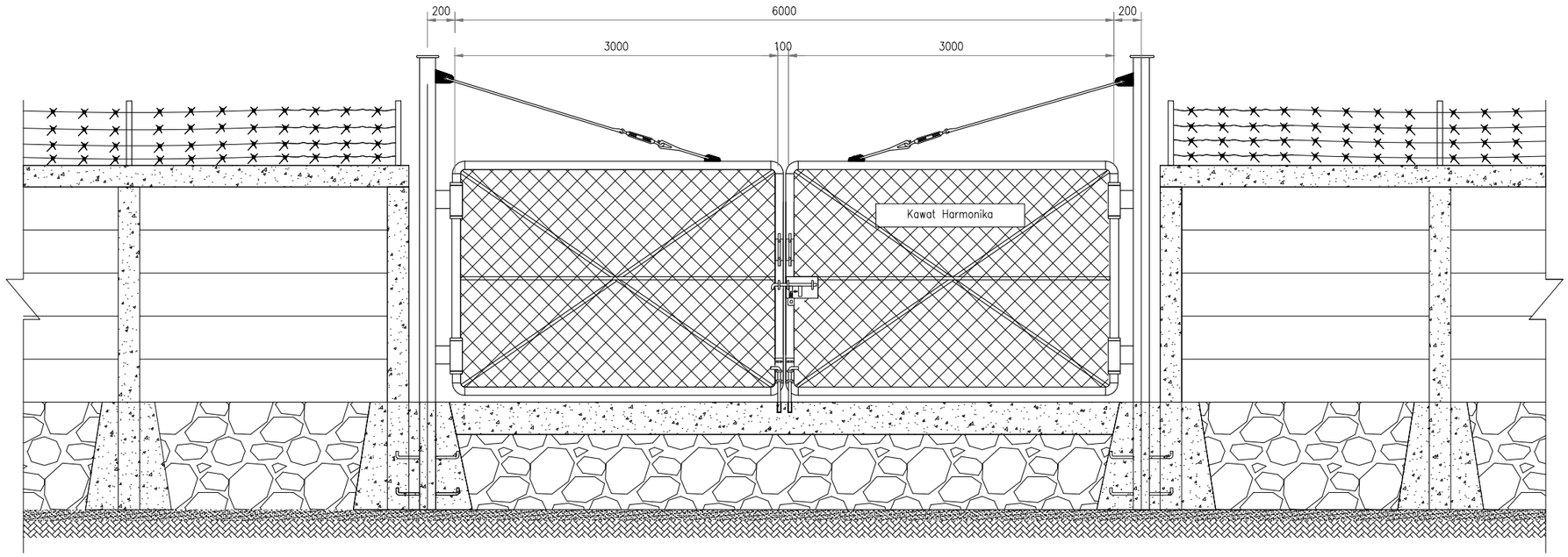

PINTU MASUK UTAMA
SKALA: 1:50

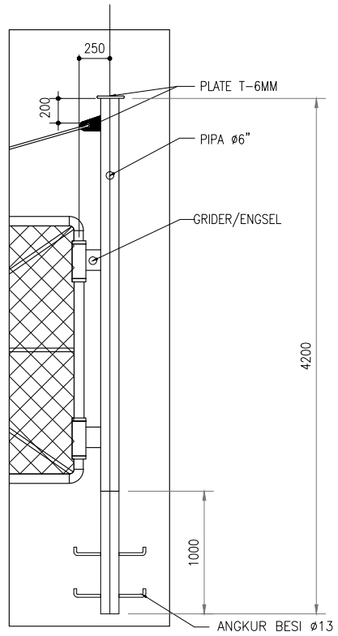

DETAIL PIPA PINTU UTAMA
SKALA: 1:50

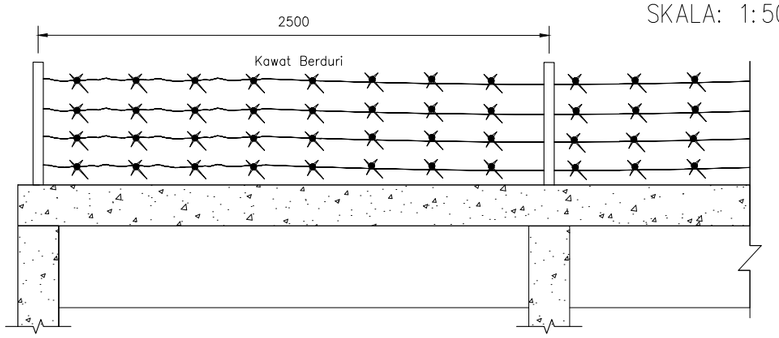

PAGAR BERDURI
SKALA: 1:30

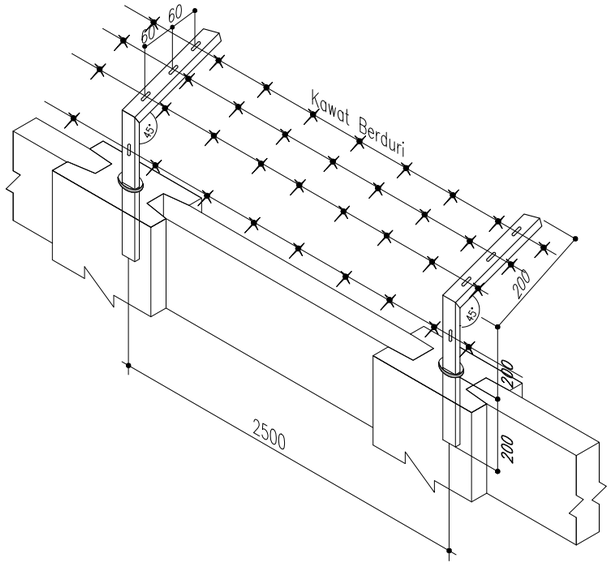

ISOMETRIC PAGAR BERDURI
SKALA: 1:20

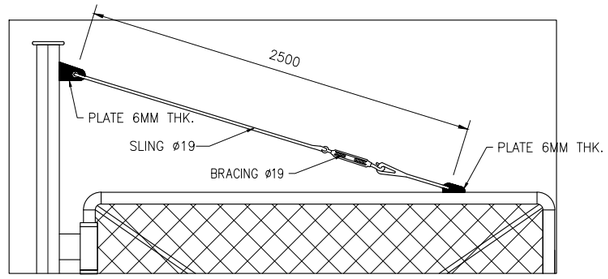

PINTU MASUK UTAMA
SKALA: 1:40

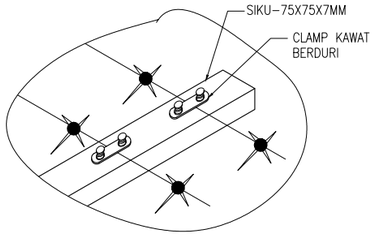

DETAIL CLAMP
SKALA: 1:50

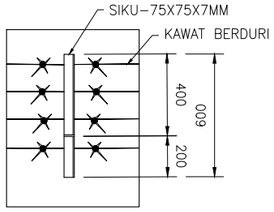

DETAIL SIKU
SKALA: 1:30

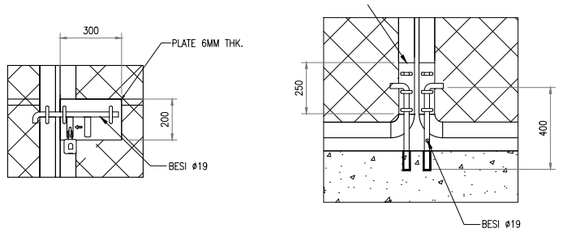

DETAIL PEMASANGAN ENGSEL PINTU
SKALA: 1:30

NOTES :

DRAWING REFERENCE	DESCRIPTION	REV	DATE	DESCRIPTION	PREPR'D	CHECK'D	APRV'D	CHECKED	APPROVED
		A	18-12-2025	ISSUED FOR REVIEW	NSR	AS	RTN		

PT. PERTAMINA EP APPROVAL

PROCET :
JASA PEMBANGUNAN FASILITAS PRODUKSI STASIUN PENGUMPUL (SP) TANJUNG MIRING BARAT & KARANGAN TIMUR

OWNER : skkmigas PERTAMINA EP

CONTRACTOR : POG

SCALE :	DRAWING NO.	SHEET. NO.	REV
NTS	TMBP – SP001 – CS – DET – D102	04 OF 05	A

DRAWING TITLE :
PLAN, SECTION AND DETAIL OF FENCING & GATE

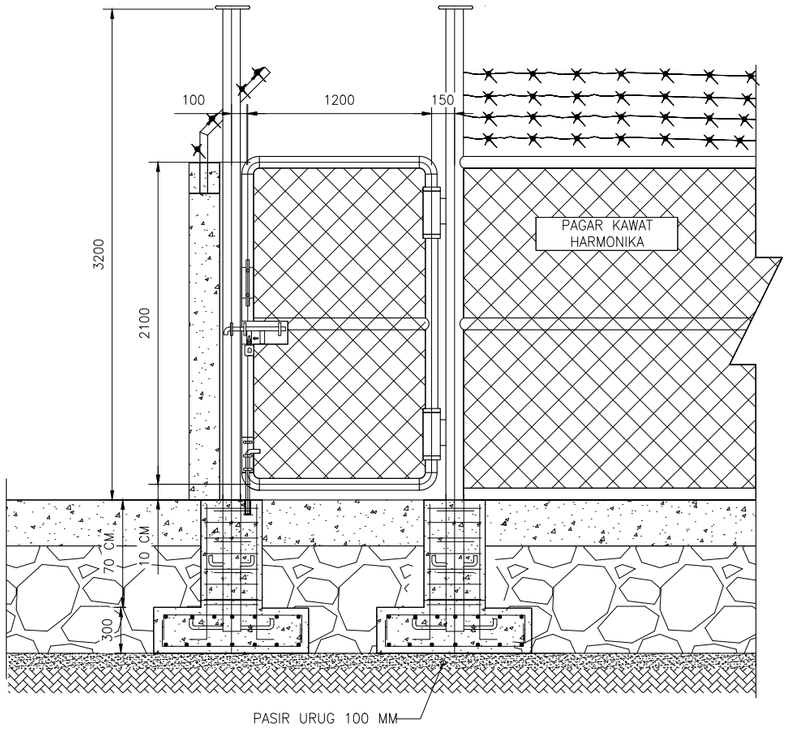

PINTU MASUK POST KEAMANAN
SKALA: 1:40

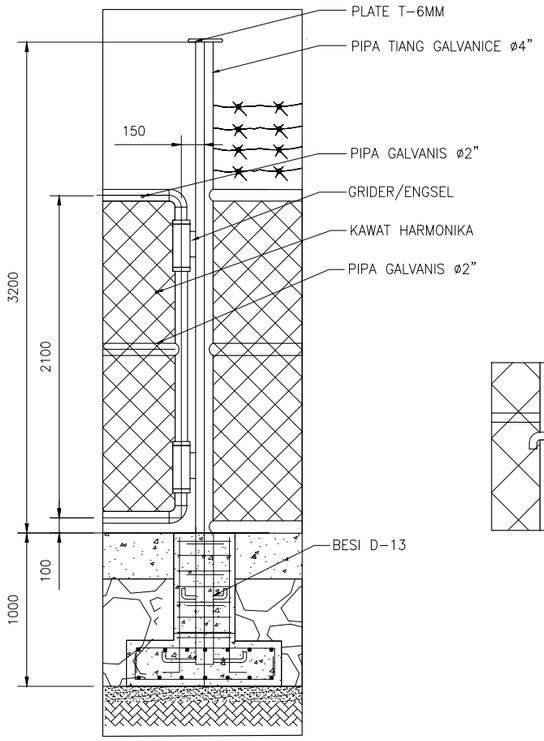

DETAIL TIANG PINTU POST KEAMANAN
SKALA: 1:40

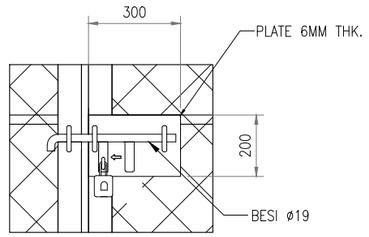

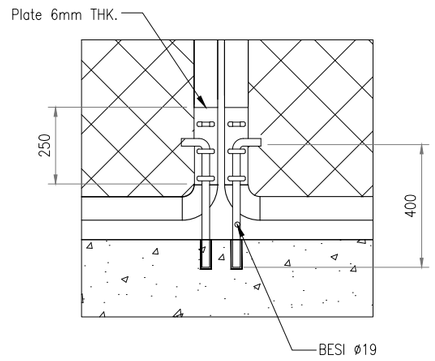

DETAIL PEMASANGAN ENGSEL PINTU
SKALA: 1:30

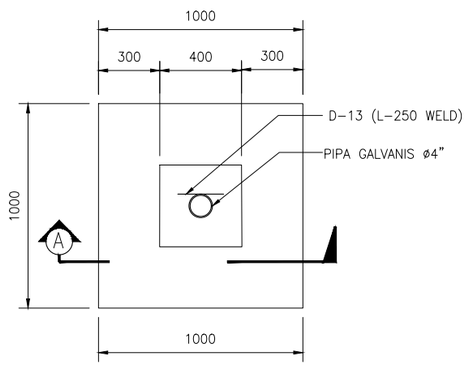

PONDASI PLAN
SKALA: 1:30

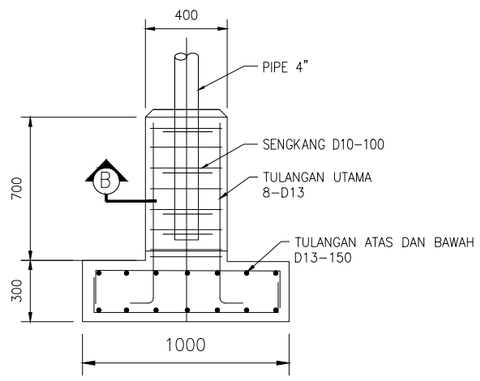

POTONGAN-A
SKALA: 1:30

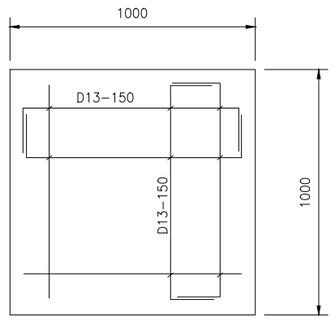

REBAR ARRENGEMENT
SKALA: 1:25

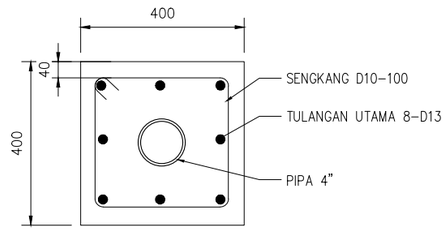

POTONGAN-B
SKALA: 1:15

NOTES :

DRAWING REFERENCE	DESCRIPTION	REV	DATE	DESCRIPTION	PREPR'D	CHECK'D	APRV'D	CHECKED	APPROVED
		A	18-12-2025	ISSUED FOR REVIEW	NSR	AS	RTN		

PT. PERTAMINA EP APPROVAL

PROCET : JASA PEMBANGUNAN FASILITAS PRODUKSI STASIUN PENGUMPUL (SP) TANJUNG MIRING BARAT & KARANGAN TIMUR

OWNER : skkmigas PERTAMINA EP

CONTRACTOR : POG

SCALE : NTS

DRAWING NO. TMBP – SP001 – CS – DET – D102

SHEET. NO. 05 OF 05

REV A

DRAWING TITLE : PLAN, SECTION AND DETAIL OF FENCING & GATE